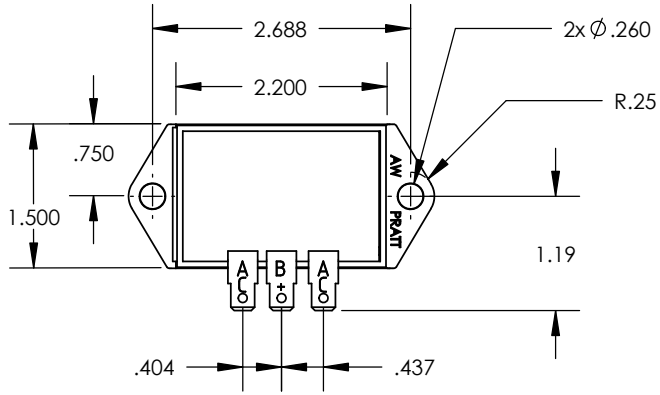

NOTES:

1. FULL WAVE 30 AMP REGULATOR/RECTIFIER WITH CHARGING SHUTDOWN IN RESPONSE TO OVER-VOLTAGE CONDITION.
2. UNIT PROTECTED AGAINST: REVERSE BATTERY CONDITION, OPEN CIRCUIT AND SHORT CIRCUIT OPERATION. EXTERNAL FUSE PROTECTION IS RECOMMENDED.
3. FOR MATING TERMINAL AND CONNECTOR PARTS USE PACKARD ELECTRICAL TERMINAL #2965142 AND CONECTOR BODY #2984959.
4. REGULATOR TO BE USED WITH 12 VOLT NEGATIVE GROUND BATTERY.
5. VOLTAGE AT REGULATION 14.1 ± 0.2 VOLTS AT 70°F, 3600 RPM.
6. MAXIMUM S.C.R. TEMPERATURE NOT TO EXCEED 205°F AT 25 AMPS.
7. REVERSE CURRENT: 1 MILLIAMP MAXIMUM AT 12.6V AT 70°F.
8. REMOVE SHARP EDGES ON TERMINALS BOTH SIDES.
9. TEMPERATURE COMPENSTATION RANGE TO BE FROM -5 MILLIVOLTS/°F TO -15 MILLIVOLTS/F°.
10. ENCAPSULATE UNIT WITH POLYURETHANE, NOT TO EXCEED HEIGHT OF THE HOUSING.
11. CURRENT AT REGULATION .5 AMPS MAXIMUM AT 70°F.
12. MINIMUM REGULATOR TURN ON VOLTAGE TO BE 6.0 VOLTS MAX.
13. REGULATOR TO DISCONTINUE CHARGING IN RESPONSE TO BATTERY OVER-VOLTAGE. OVERVOLTAGE SETPOINT TO BE: 18.5V ± 1.2V AT 70°F. REGULATOR SHALL NOT RESUME CHARGING UNTILL STATOR FALLS BELOW 20V PEAK AT 70°F. REGULATORS TO BE 100% TESTED ON THESE PARAMETERS.

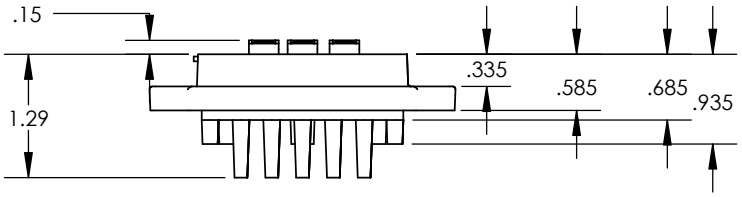

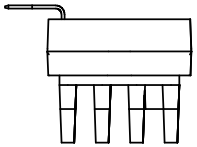

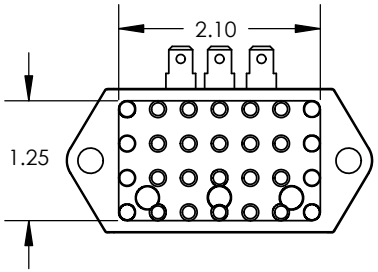

DWN	CHK	DESCRIPTION ECN #	REV	DATE
JG	DB		REL	3/23/10

PROPRIETARY AND CONFIDENTIAL

THE INFORMATION CONTAINED IN THIS DRAWING IS THE SOLE PROPERTY OF TROMBETTA ELECTRONICS. ANY REPRODUCTION IN PART OR AS A WHOLE WITHOUT THE WRITTEN PERMISSION OF TROMBETTA ELECTRONICS IS PROHIBITED.

QUOTE

PROD

NEXT ASSY | USED ON

APPLICATION

UNLESS OTHERWISE SPECIFIED:
DIMENSIONS ARE IN INCHES
TOLERANCES:
FRACTIONAL ±
ANGULAR: MACH ± BEND ±
TWO PLACE DECIMAL ±0.01
THREE PLACE DECIMAL ±0.005
METRIC IN [mm]

INTERPRET GEOMETRIC TOLERANCING PER: ANSI Y14.5M-1982

MATERIAL

FINISH

DO NOT SCALE DRAWING

	NAME	DATE
DRAWN	JG	7/23/10
CHECKED	DB	7/23/10
ENG APPR.	DB	7/23/10
MFG APPR.		
Q.A.		

COMMENTS:
FIRST ANGLE VIEW

TROMBETTA ELECTRONICS
197 Commercial St.
Malden, Ma. 02148

TITLE:
30A FULL-WAVE REGULATOR/RECTIFIER

SIZE: A | DWG. NO.: AXXXX | REV: REL

SCALE: 1:1 | WEIGHT: | SHEET 1 OF 1